Current part is item (33) on diagram. Available at www.oshkoshequipment.com

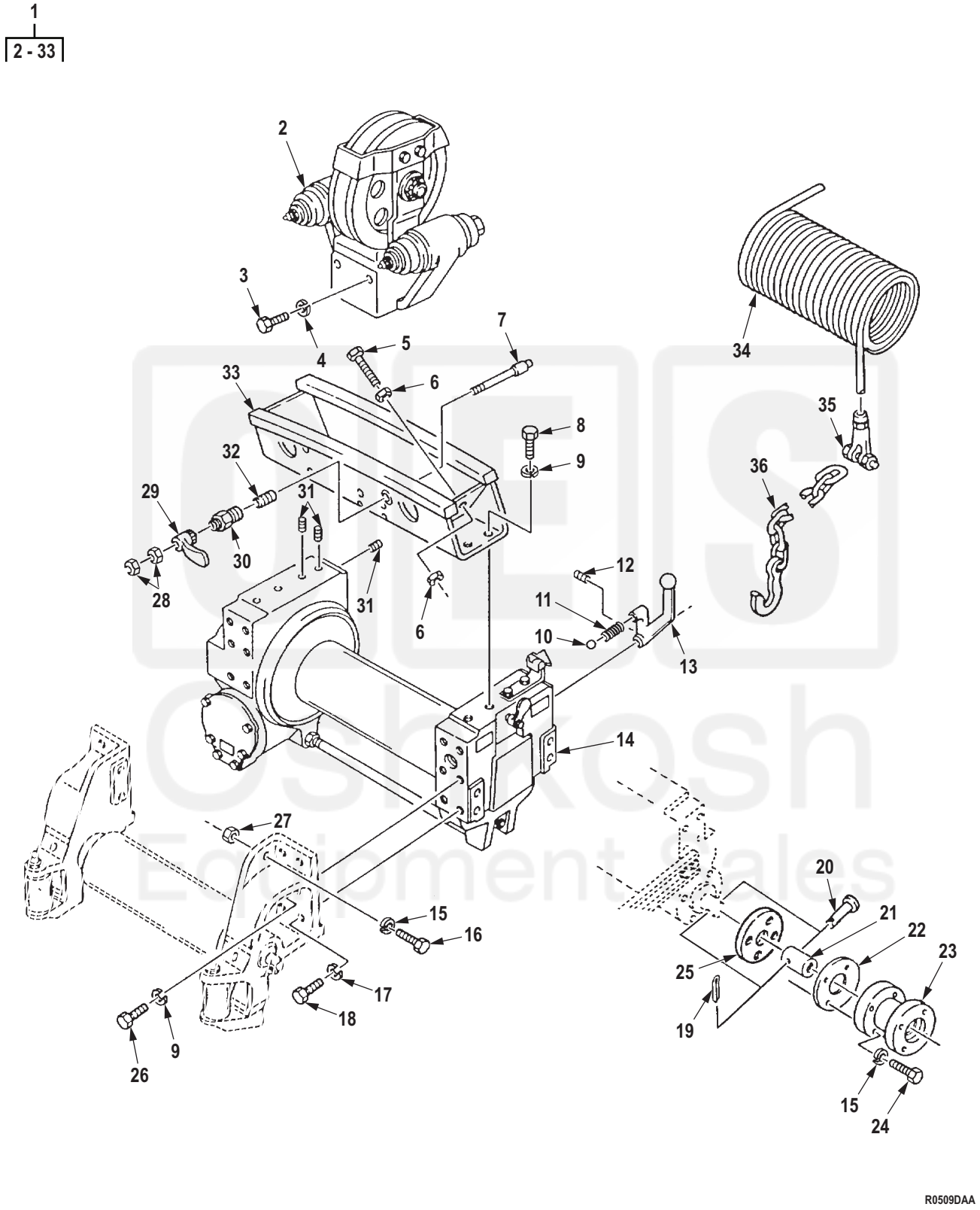

Figure 492. Front Winch Assembly Complete and Wire Rope Assembly, Wrecker.

Current part is item (33) on diagram. Available at www.oshkoshequipment.com

Current part is item (33) on diagram. Available at www.oshkoshequipment.com

(1) ITEM NO.	(2) SMR CODE	(3) NSN	(4) CAGEC	(5) PART NUMBER	(6) DESCRIPTION AND USABLE ON CODE (UOC)	(7) QTY
					GROUP 2001 HOIST, CAPSTAN, WINDLASS, CRANE OR WINCH ASSEMBLY.	
					FIG. 492. FRONT WINCH ASSEMBLY COMPLETE AND WIRE ROPE ASSEMBLY, WRECKER.	
1	PAFHH	2590-00-741-1122	19207	7411122	WINCH ASY FRONT UOC: DAL,V18,ZAL	1
2	PAFFF	2590-00-121-0707	19207	7954483	. SHEAVE ASSEMBLY,SWI UOC: DAL,V18,ZAL	1
3	PAFZZ	5305-00-052-2218	96906	MS35265-107	. SCREW,MACHINE UOC: DAL,V18,ZAL	4
4	PAFZZ	5310-00-637-9541	00198	132661	. WASHER,LOCK UOC: DAL,V18,ZAL	4
5	PAFZZ	5305-00-054-9285	96906	MS51955-71	. SETSCREW UOC: DAL,V18,ZAL	2
6	PAFZZ	5310-00-834-8732	96906	MS35691-33	. NUT,PLAIN,HEXAGON UOC: DAL,V18,ZAL	4
7	PAFZZ	4820-00-652-5548	19207	8741768	. POPPET,LOCK,TROLLEY UOC: DAL,V18,ZAL	1
8	PAFZZ	5305-00-724-7219	80204	B1821BH063C125N	. SCREW,CAP,HEXAGON H UOC: DAL,V18,ZAL	4
9	PAFZZ	5310-00-820-6653	80205	MS35338-50	. WASHER,LOCK UOC: DAL,V18,ZAL	12
10	PAFZZ	3110-00-948-9796	81346	MS19061-20013	. BALL,BEARING UOC: DAL,V18,ZAL	1
11	PAFZZ	5360-00-740-9727	61465	304677	. SPRING,HELICAL,COMP UOC: DAL,V18,ZAL	1
12	PAFZZ	5305-00-724-6810	96906	MS51963-101	. SETSCREW UOC: DAL,V18,ZAL	1
13	PAFZZ	5340-00-351-7831	19207	7954471	. LEVER,MANUAL CONTRO UOC: DAL,V18,ZAL	1
14	PAFHH	2590-00-351-7865	19207	7954486	. WINCH,DRUM,VEHICLE UOC: DAL,V18,ZAL	1
15	PAFZZ	5310-00-003-4094	80205	MS35338-48	. WASHER,LOCK UOC: DAL,V18,ZAL	8
16	PAFZZ	5305-00-719-5235	80204	B1821BH050F175N	. SCREW,CAP,HEXAGON H UOC: DAL,V18,ZAL	4
17	PAFZZ	5310-00-584-7888	R1120	204392-212	. WASHER,LOCK UOC: DAL,V18,ZAL	4
18	PAFZZ	5305-00-939-9204	44218	S7-65	. SCREW,CAP,HEXAGON H UOC: DAL,V18,ZAL	4
19	PAFZZ	5315-00-842-3044	80205	MS24665-283	. PIN,COTTER UOC: DAL,V18,ZAL	1

Current part is item (33) on diagram. Available at www.oshkoshequipment.com

Current part is item (33) on diagram. Available at www.oshkoshequipment.com

(1) ITEM NO.	(2) SMR CODE	(3) NSN	(4) CAGEC	(5) PART NUMBER	(6) DESCRIPTION AND USABLE ON CODE (UOC)	(7) QTY
20	PAFZZ	5315-01-109-6846	19207	12276978	. PIN,STRAIGHT,HEADED UOC: DAL,V18,ZAL	1
21	PAFZZ	3010-01-101-6712	19207	12276915	. COUPLING,SHAFT,RIGI UOC: DAL,V18,ZAL	1
22	PAFZZ	5330-00-057-3823	19207	7409822	. GASKET UOC: DAL,V18,ZAL	1
23	PAFZZ	5340-01-084-1232	19207	12276904	. BRACKET,MOUNTING UOC: DAL,V18,ZAL	2
24	PAFZZ	5305-00-071-2073	80204	B1821BH050C250N	. SCREW,CAP,HEXAGON H UOC: DAL,V18,ZAL	4
25	PAFZZ	5330-01-115-0651	19207	12277028	. RETAINER,OIL SEAL UOC: DAL,V18,ZAL	4
26	PAFZZ	5305-00-724-7222	80204	B1821BH063C200N	. SCREW,CAP,HEXAGON H UOC: DAL,V18,ZAL	8
27	PAFZZ	5310-00-732-0560	96906	MS51968-14	. NUT,PLAIN,HEXAGON UOC: DAL,V18,ZAL	4
28	PAFZZ	5310-00-880-7744	96906	MS51967-5	. NUT,PLAIN,HEXAGON UOC: DAL,V18,ZAL	2
29	PAFZZ	2540-00-740-9150	61465	7409150	. LATCH,DRUM LOCK UOC: DAL,V18,ZAL	1
30	PAFZZ	2590-00-226-2347	19207	8344240	. NUT,WINCH POPPET UOC: DAL,V18,ZAL	1
31	PAFZZ	5305-00-724-7206	96906	MS51963-155	. SETSCREW UOC: DAL,V18,ZAL	10
32	PAFZZ	5360-00-753-8706	19207	7538706	. SPRING,HELICAL,COMP UOC: DAL,V18,ZAL	1
33	PAFZZ	2590-01-082-2526	19207	8344234	. TRACK ASSEMBLY,TROL UOC: DAL,V18,ZAL	1
34	MFFZZ		19207	7699769-280FT	WIRE ROPE ASSY, SIN MAKE FROM ROPE, P/N 7699769, 280 FT LONG UOC: DAL,V18,ZAL	1
35	PAFZZ	4030-00-158-2409	19207	7074517	SOCKET,WIRE ROPE UOC: DAL,V18,ZAL	1
36	PAFZZ	4010-01-027-0356	19207	12253104-4	CHAIN ASSEMBLY,SING UOC: DAL,V18,ZAL	1

END OF FIGURE

Current part is item (33) on diagram. Available at www.oshkoshequipment.com